APOLLO
DESERT SERIES

Weatherproof outdoor TV cabinets

Model WM808NA - Heavy duty flat/tilting mount

SPECIFICATIONS	
Designed for outdoor installation with weatherproof construction and stainless steel hardware	
Description	Weather resistant flat/tilt wall mount - black
Suitable for TV Size	86”
Tilt	Adjustable from -12˚ to +12˚
Maximum load	115 kg

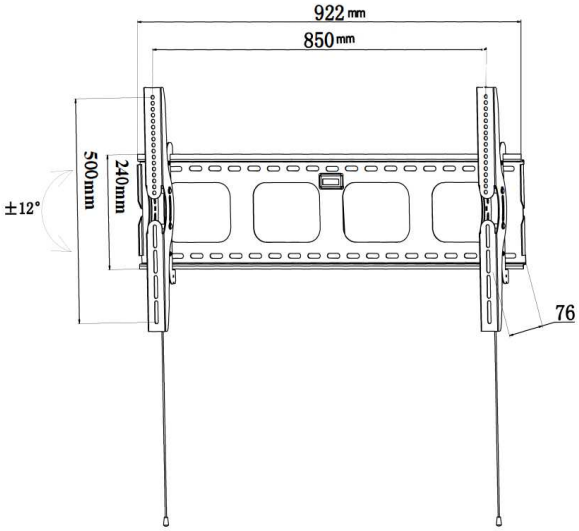

Installing the Apollo mount

NOTE: We recommend that your mount be installed by a qualified professional. We accept no liability for damages caused by incorrect assembly, installation or use.

WARNING

- Always refer to the installation instructions included with your mount
- Make sure that the supporting surface will safely support the combined weight of the load of the equipment (cabinet and TV) and all attached hardware components
- Make sure to use proper mounting hardware and that all mounting hardware is securely fastened

Website - www.digiscreens.ae Email - contact@digiscreens.ae